Hollow Core Composite Insulator

Cust. ref: 5EA-770-000

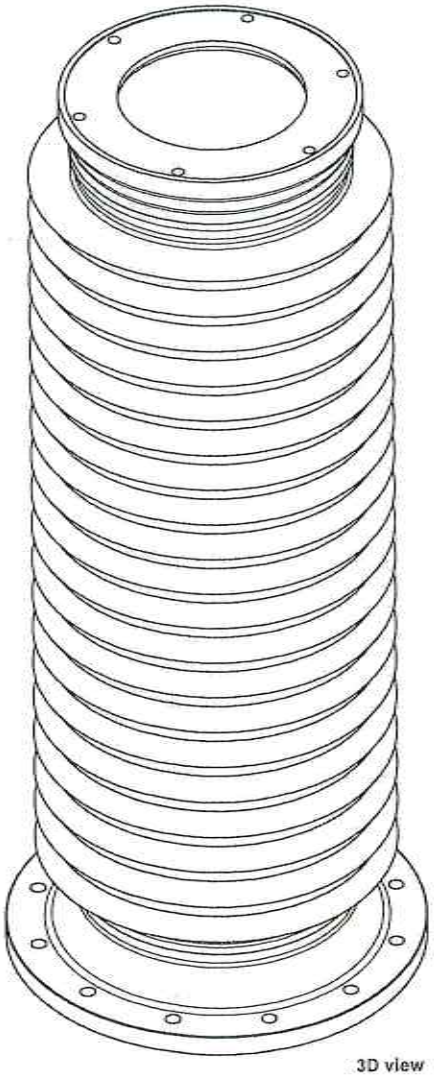

3D view

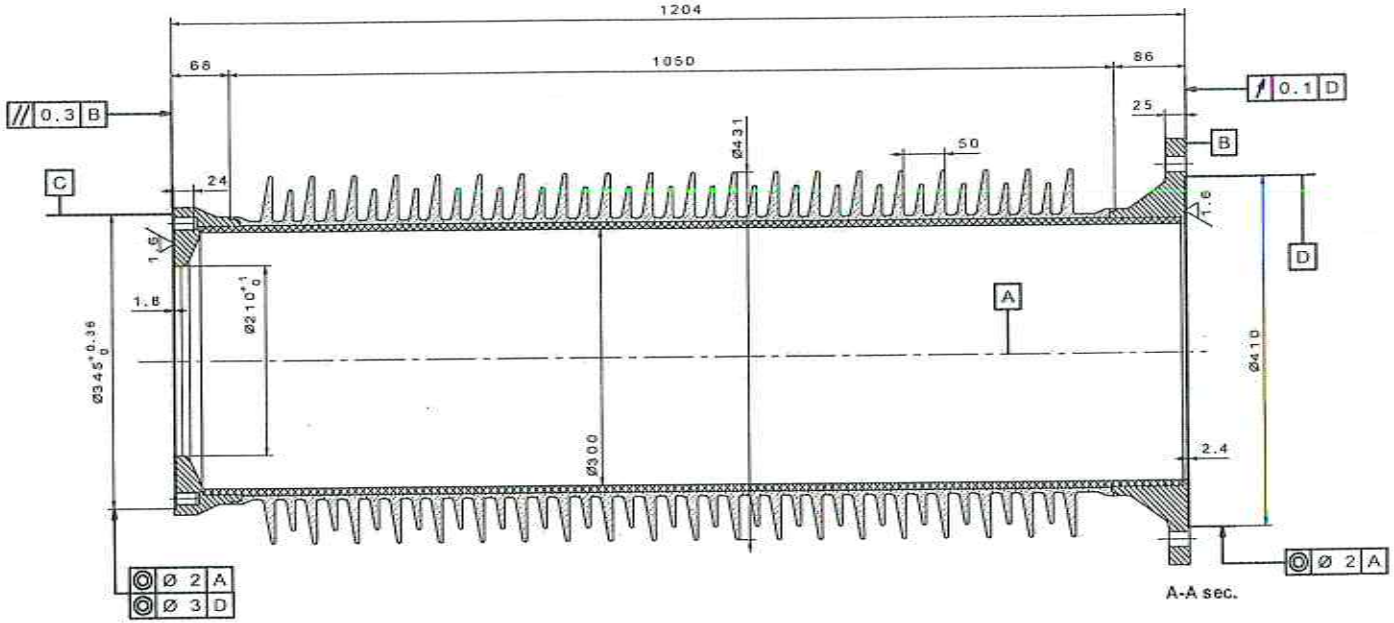

A-A sec.

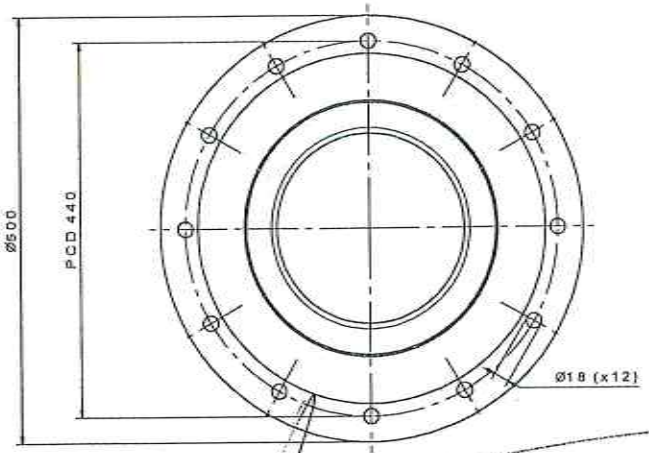

bottom view

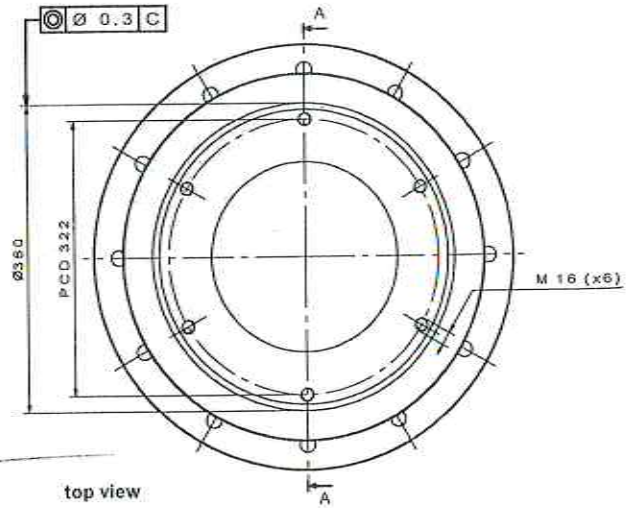

top view

20.09.16

MAIN PARAMETERS
Working Temperature: -50 / +105 °C
Arcing distance >= 1850 mm
Creepage distance >= 4000 mm
Approx.Weight: 64 kg
Inner usable volume: 85 cdm
Silicon housing color: light gray
Top Flange Load: n/a

Maximum Mechanical Load MML - Top Load= 6650 N
Torque value = 8 kNm
Max deflection at MML <= 9 mm
Specified Mechanical Load SML- Top Load = 16,625 kN
Torque value = 20 kNm
Maximum service pressure MSP = 1.0 MPa
Specified internal pressure MSP = 4.0 MPa
Max leakage rate (@ 1.0 MPa abs) < 0.1%/Y

Rev. Changes	Changed lower temperature from -50 down to -60°C			
Remarks	n/a			
Saver SpA www.saversomposit.com	Drawing / Part HC300006		Revision 1	Sheet 1/1
	Description Hollow core comp. insulator Ø300 L1204			
	Parent Reference n/a	n/a	Compliance specification IEC 61462	Colour RAL n/a
Material (substances, materials - quality, by weight/pieces) n/a			Surface finish n/a	Control SYS SC-001
Date	Tolerances ISO 2768-mK	Weight (kg) 64	Date 20.09.2016	Drawn IC
				Approved IC

4	Bottom flange - [illegible]	
3	Silicon housing - [illegible]	
2	FRP tube - [illegible]	
1	Top flange - [illegible]	
Pos	Description	